THIS DRAWING IS UNPUBLISHED. RELEASED FOR PUBLICATION -.-
© COPYRIGHT - BY TYCO ELECTRONICS CORPORATION. ALL RIGHTS RESERVED.

LOC	DIST
GP	00

REVISIONS

P	LTR	DESCRIPTION	DATE	DWN	APVD
	G	REVISED PER ECO-06-026525	8/JAN/07	ZMR	WLM

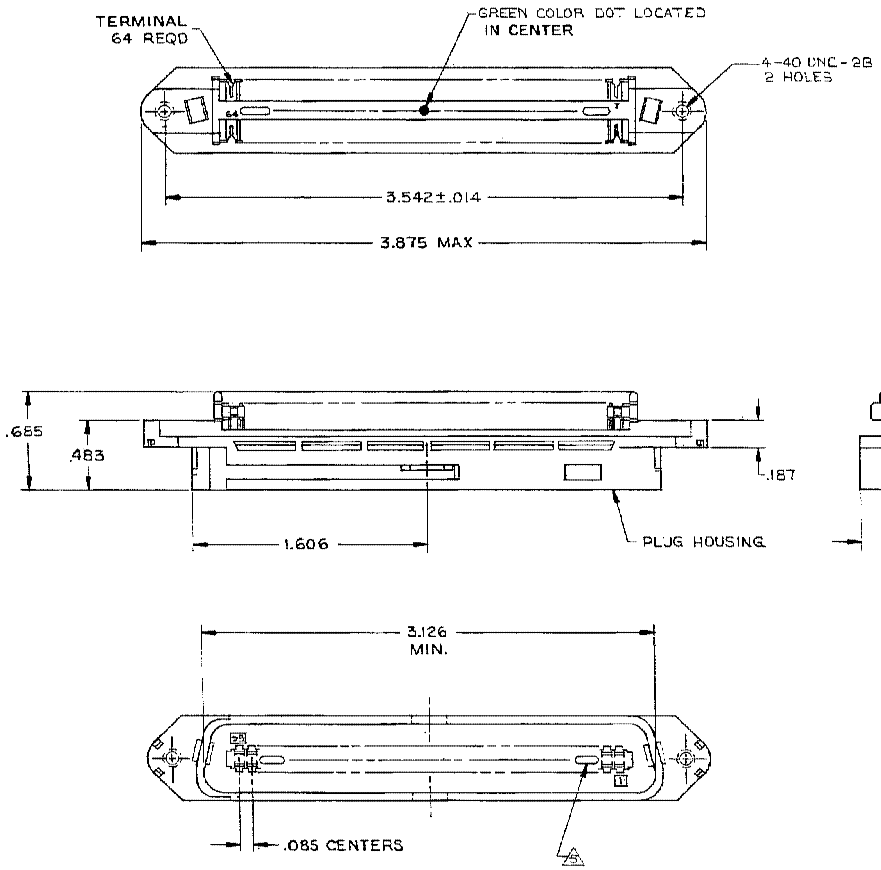

1. THE CONTACT SURFACES OF THE TERMINALS ARE COATED WITH LUBRICANT.

2. ALL DIMENSIONS SHOWN ARE FOR REFERENCE ONLY UNLESS OTHERWISE SPECIFIED.

3. MATERIAL:
   HOUSING – THERMOPLASTIC (BLACK)
   TERMINALS – HIGH STRENGTH COPPER ALLOY PLATED WITH .000030 MIN GOLD, OR, GOLD FLASH OVER .000030 MIN PALLADIUM NICKEL, ON CONTACT MATING SURFACE. .000050 MIN NICKEL UNDERPLATE OVER ENTIRE TERMINAL.

4. WIRE SIZE: 22 AWG SOLID OR 22 AWG 7 STRANDS OF COPPER CONDUCTORS. MAX INSULATION DIAMETER OF .045 IS ACCEPTABLE FOR MOST APPLICATIONS.

5. CORING MAY OR MAY NOT APPEAR AND IS AT THE DISCRETION OF TYCO ELECTRONICS.

552303

AS SHOWN	552303-1
DESCRIPTION	PART NO

THIS DRAWING IS A CONTROLLED DOCUMENT.

DIMENSIONS: INCHES

TOLERANCES UNLESS OTHERWISE SPECIFIED:
0 PLC ± –
1 PLC ± –
2 PLC ± –
3 PLC ± –
4 PLC ± –
ANGLES ± –

MATERIAL 3

FINISH 3

DWN G. BOWMAN 12-27-79
CHK M.D. FRIEL 12-28-79
APVD B.G. WARD 12-28-79
PRODUCT SPEC –
APPLICATION SPEC –
WEIGHT –

tyco Electronics — Tyco Electronics Corporation, Harrisburg, PA 17105-3608

NAME: PLUG ASSY, 64 POSITIONS, C SLOT W/ 4-40 TAPPED HOLES, CHAMP-LOK

SIZE	CAGE CODE	DRAWING NO	RESTRICTED TO
A2	00779	C-552303	–

CUSTOMER DRAWING | SCALE NTS | SHEET 1 OF 1 | REV G

AMP 1471-9 REV 31MAR2000